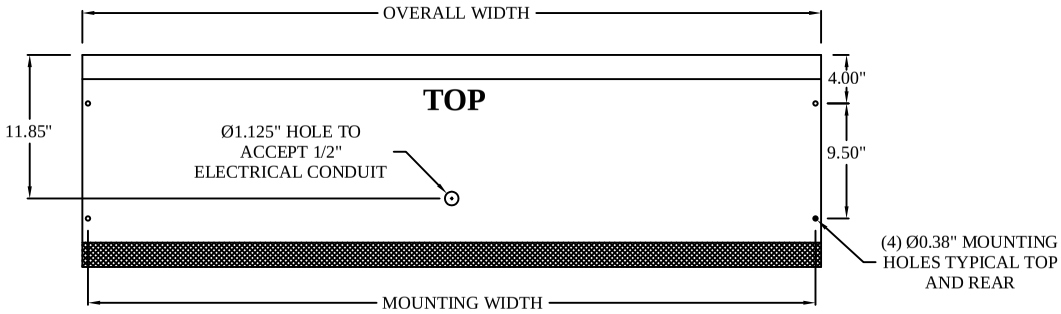

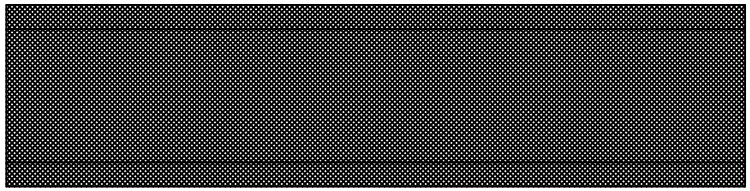

FRONT

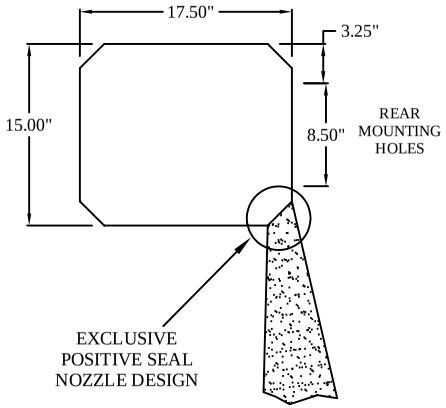

MODEL NUMBER	RCE 1-36	RCE 1-42	RCE 1-48	RCE 1-60	RCE 2-60	RCE 2-72	RCE 2-84	RCE 2-96	RCE 3-108	RCE 3-120	RCE 3-132	RCE 4-144
OVERALL WIDTH	37	43	49	61	61	73	85	97	109	119	134	146
NOZZLE WIDTH	36	42	48	60	60	72	84	96	108	118	133	145
MOUNTING WIDTH	36 1/16	42 1/16	48 1/16	60 1/16	60 1/16	72 1/16	84 1/16	96 1/16	108 1/16	118 1/16	133 1/16	145 1/16

JOB NAME :	**TAG(S) :**
LOCATION :	**MODEL # :**
CONTRACTOR :	**ENGINEER :**

POWERED AIRE INC.
109 Mortensen Rd. Greenville, PA 16125

DATE: 04/05/05	PART DESCRIPTION: POWERED AIRE SYSTEMS MODEL RCE UNHEATED CUSTOMER ENTRANCE DOOR
DRAWN BY: B.K.J.	
PART/FILE# RCE	